GENERAL PURPOSE THYRISTOR FIRING CIRCUIT

Frank J. Bourbeau
Enerpro Inc.
Goleta, California
U.S.A.

1. INTRODUCTION

A general purpose firing circuit board for phase controlled thyristors provides the interface between the supervisory control element and the mains voltage portion of the power circuit. The availability of this firing board facilitates the design of both conventional and unconventional power supplies and motor controls with a minimum of development expense.

This article describes the operating principle of the firing circuit and details interesting applications in the area of induction generator controllers, linear motor controllers, 12-pulse converters and cycloconverters.

Firing circuits operate in an environment of high electrical noise and high voltage stress. Often, they are exposed to high temperatures and atmospheric pollution as well. Further, the cost of the firing board may be insignificant compared to the overall cost of the power conversion equipment. Thus the time and expense of developing a reliable firing circuit may not be justified if a suitable alternative is readily available at a reasonable price. For these reasons, a substantial number of manufacturers of large but often limited quantity power supplies and motor controls have standardized on the Enerpro firing board. These firms have purchased well over 13,000 firing boards during the past five years.

Prior to the early 1980's, available general purpose firing circuit boards were based on magnetic amplifier or RC charge discharge circuit technology. These analog delay methods require complex circuitry and do not provide stable balanced gate delay or long-term stability.

Recognizing the market need, we developed a firing circuit in 1982 based on a technology originally created for high voltage dc power transmission[1]. This technique, referred to variously as the "Ainsworth" or "biased detector" methods, utilizes a voltage controlled oscillator(VCO) that is phase-locked to the mains frequency. The oscillator output is counted down and split into six equidistant gate pulse commands. Additional logic circuitry was added to provide features such as insensitivity to phase rotation and pulse train ("picket fence") gating. The resulting firing board design performed effectively but was too complex to become a viable product for general use.

The timely arrival of CMOS LSI gate array technology offered a feasible way of reducing the complexity of the gate delay circuitry. As a result, a general purpose firing circuit could be designed with better performance and reliability in a more compact package than existing designs.

The first generation firing circuit[2] incorporated the digital elements in the LSI device. Subsequently, a new LSI device was designed to include the analog VCO along with additional logic to produce a second set of six gate pulse commands. These additional gate signals enhanced the versatility of the firing board by extending the range of application to 4-quadrant converters, 12-pulse converters and sequence reversing ac controllers. The second generation 40-pin LSI device is shown in Figure 1. Figure 2 shows a 12-thyristor firing package made up of the FCOG6100 main firing board and the FCOAUX60 auxiliary firing board. The two-board assembly is compact, measuring 190 mm by 150 mm by 60 mm, and economical because only one gate delay generator is required.

Presented at the Drives/Motors/Controls Conference,
Birmingham England, Nov. 30 - Dec. 1, 1988

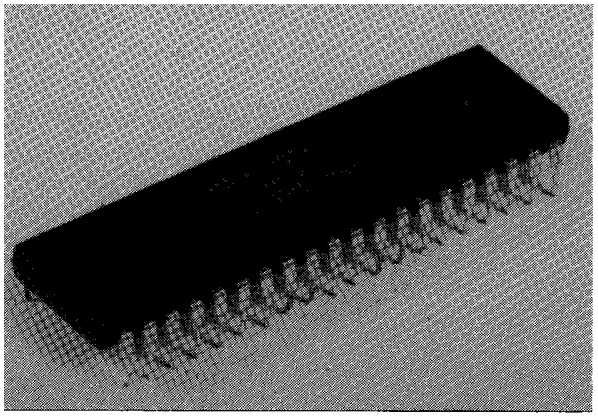

Figure 1. Phase Control LSI device

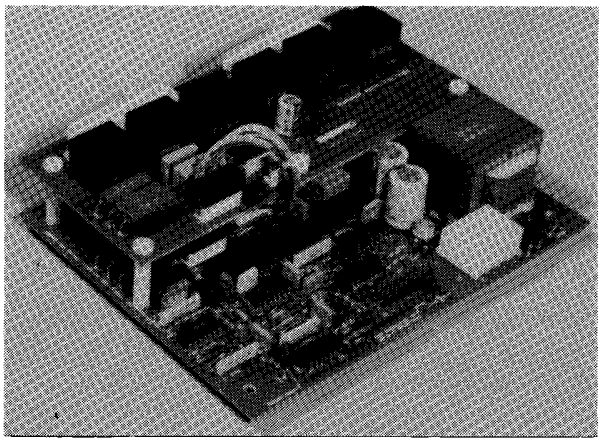

Figure 2. 12-Thyristor Firing Package

2. DISCUSSION

2.1 THEORY OF OPERATION

The block diagram for 12-thyristor gating is shown in Figure 3.

The major elements of the firing circuit are the phase reference circuit, buffer amplifier & soft start/stop circuit, phase loss circuit, the phase-locked loop delay generator, decoding circuit, gate pulse amplifiers and pulse transformers.

2.1.1 Phase Reference Circuit

The firing circuit utilizes phase reference signals derived by resistive attenuators from the three mains voltages. This eliminates the usual reference sensing transformer and gives significant savings in size, weight and cost. Additional circuitry compensates for possible mains voltage unbalance with respect to ground, thus providing a balanced set of reference signals.

The firing circuit obtains its gate delay timing references from the mains voltages; E_a, E_b and E_c, as shown in Figure 4. The outputs of the reference signal processing circuit are the 180° wide, 120° displaced, A-B-C logic signals which are inputs to the three EX-NOR phase detectors shown in Figure 3. The reference signal processing circuit accomplishes the following objectives:

- Eliminate the need for reference sensing transformers.
- Provide adequate filtering of mains voltage distortion.
- Provide in-phase reference logic signals for ac controller gating.
- Provide 30° lagging reference signals for converter gating.
- Provide proper reference phasing with positive or negative sequence.

The mains voltages E_a, E_b and E_c are attenuated by a factor of 15/2000 by 2.0 megohm/15 kohm resistors to form the low level analogs of the mains voltages; e_a, e_b and e_c. These signals are filtered by 150 kohm series resistors and .033 uF shunt capacitors, yielding the filtered phase reference signals; e_{af}, e_{bf} and e_{cf}. The RC circuits give 60° phase shift at 50 Hz. For 60 Hz operation, 60° phase shift is obtained by decreasing the filter resistance to 120 kohm.

A fictitious neutral signal, e_n, is created at the common connection of three 15 kohm resistors connected to the 2.0 megohm sensing resistors. The neutral signal is filtered and phase shifted by 60° and designated as e_{nf}.

The 60° filter phase delay means that the reference for, say, the A phase must be derived from one of the other phases if the A phase reference is to be in phase with the A phase mains voltage, as is required to obtain 100% thyristor conduction. The reference phasor switching circuit consisting of the three single pole-double throw analog switches, shown in Figure 4, is set by the phase sequence indicating logic signal, N, produced by the LSI device. These switches select the appropriate filtered reference signals for input to the

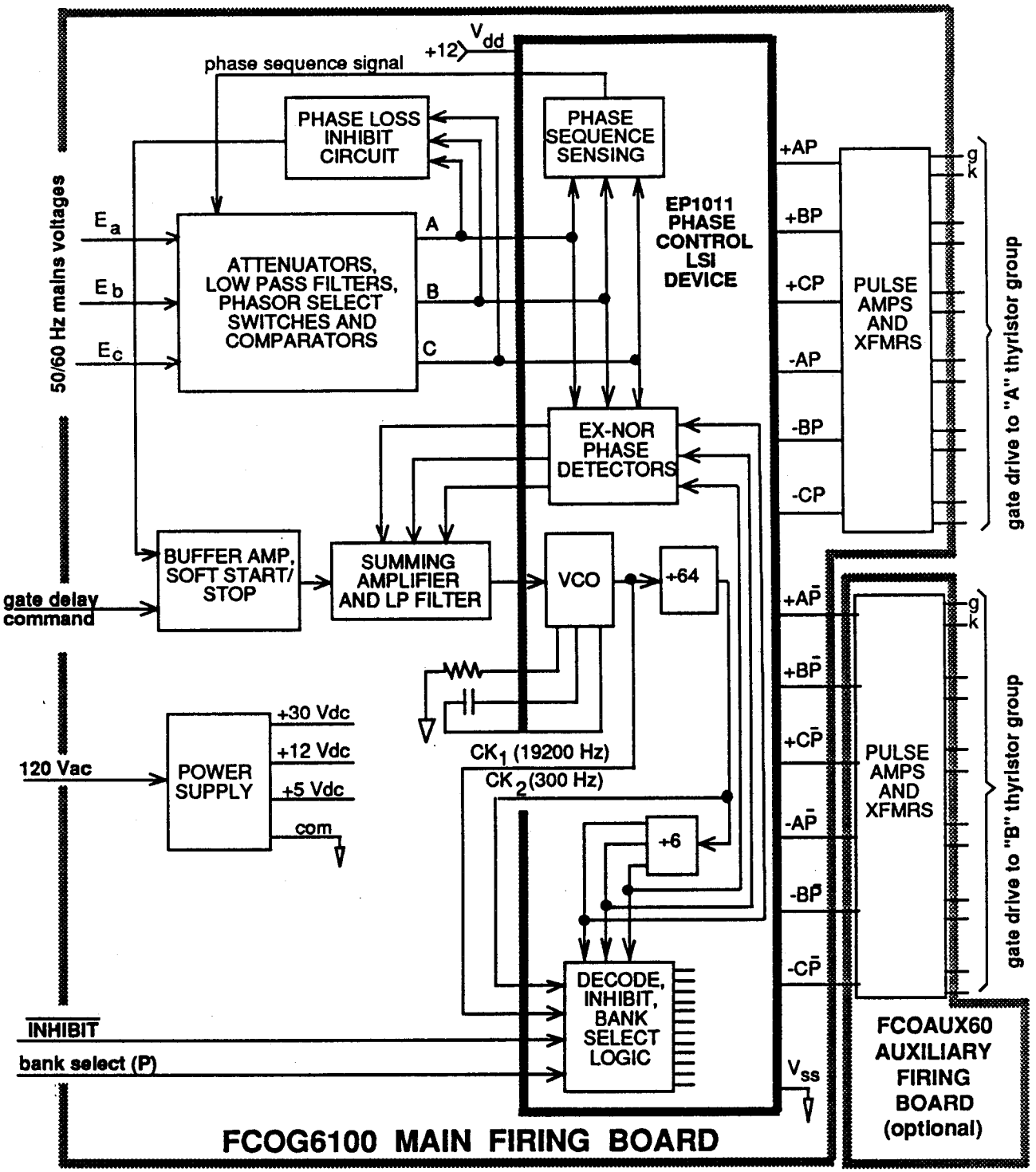

Figure 3. Firing Circuit Block Diagram

reference comparators. The operation of the phase reference signal processing circuit is thus unaffected by phase sequence.

A programming plug on the firing board selects in-phase references for ac controller gating or 30° delayed references for converter gating.

The logic references for ac controller gating and converter gating are shown in the table below:

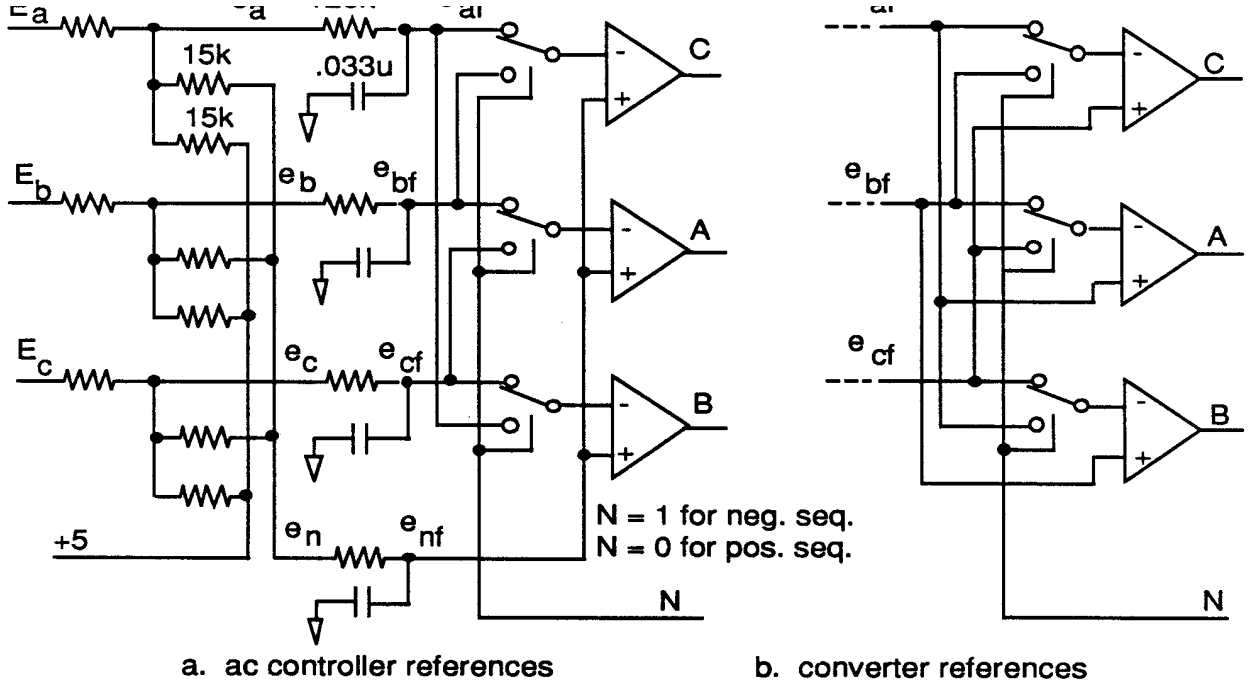

Figure 4. Phase Reference Sensing Circuitry

reference signal	ac controller	
	pos. seq	neg. seq.
A	$SGN(e_{nf} - e_{bf})$	$SGN(e_{nf} - e_{cf})$
B	$SGN(e_{nf} - e_{cf})$	$SGN(e_{nf} - e_{af})$
C	$SGN(e_{nf} - e_{af})$	$SGN(e_{nf} - e_{bf})$
converter		
A	$SGN(e_{af} - e_{bf})$	$SGN(e_{af} - e_{cf})$
B	$SGN(e_{bf} - e_{cf})$	$SGN(e_{bf} - e_{af})$
C	$SGN(e_{cf} - e_{af})$	$SGN(e_{cf} - e_{bf})$

Table 1. Phase Reference Selection

2.1.2 Buffer Amplifier and Soft-Start/Stop

The buffer amplifier prevents an out-of-range delay angle command signal from over-driving the phase locked loop delay generator. The buffer amplifier operating with the SOFT-START/STOP circuit brings the thyristors into conduction from a large initial gate delay angle when gating is enabled with a contact opening or by application of 120 Vac power to the firing board. Similarly, when the enable contact is closed, the gate delay angle is ramped to a large value before gating is inhibited.

2.1.3 Phase Locked Loop

The phase locked loop gate delay angle generator, shown in Figure 5, consists of a summing amplifier, voltage controlled oscillator(VCO), divide-by-64 counter, divide-by-6 counter/phase splitter and three exclusive-NOR gates. The multiple phase detectors and the single VCO constitute a three phase PLL. This loop has extremely fast response and achieves phase lock within one cycle of the mains frequency.

The VCO control voltage is the inverted sum of the three EX-NOR phase detector outputs and the dc signal output of the buffer amplifier. When the loop is in lock, the VCO control voltage assumes and average level which produces an average VCO output frequency equal to 64*6 = 384 times the mains frequency.

The $384*f_{mains}$ clock signal, designated as CK1, is counted down by 64 to give the $6*f_{mains}$ clock signal, CK2. The latter clock signal is counted down by 6 to equal the mains frequency and then split into three 120° displaced 180° wide delayed reference signal designated as A_d, B_d and C_d. The A, B, C mains voltage references and the A_d, B_d and C_d delayed references are input to the three

EX-NOR gates to produce the phase detector outputs D_a, D_b, and D_c. The phase detector outputs are summed along with the buffered gate delay

The three phase detector outputs and the buffered delay command inputs must sum to a constant value if the VCO frequency is to remain a fixed multiple of the mains frequency. Therefore, an increase in the buffered delay command input must be accompanied by a corresponding decrease in the average value of the summed phase detector outputs. Thus the dc level change, for example in the A-phase detector output, is produced by a proportional change in the delay angle between the mains reference, A, and the delayed reference, A_d. A proportional relationship is thus enforced between the dc input to the summing amplifier and the angular displacement between the mains voltage phase references and the delayed phase references.

The minimum and maximum delay angles are determined by the values of the BIAS and SPAN resistors, shown in Figure 5a. These delay angle stops are selected according to the transfer characteristics of the thyristor circuit. For example, a 4-quadrant converter may require a delay angle range of 30° to 150° to ensure reliable commutation, while an ac controller may be gated over a 175° to 5° range for 1% to 99% conduction.

The response time of the PLL gate delay angle

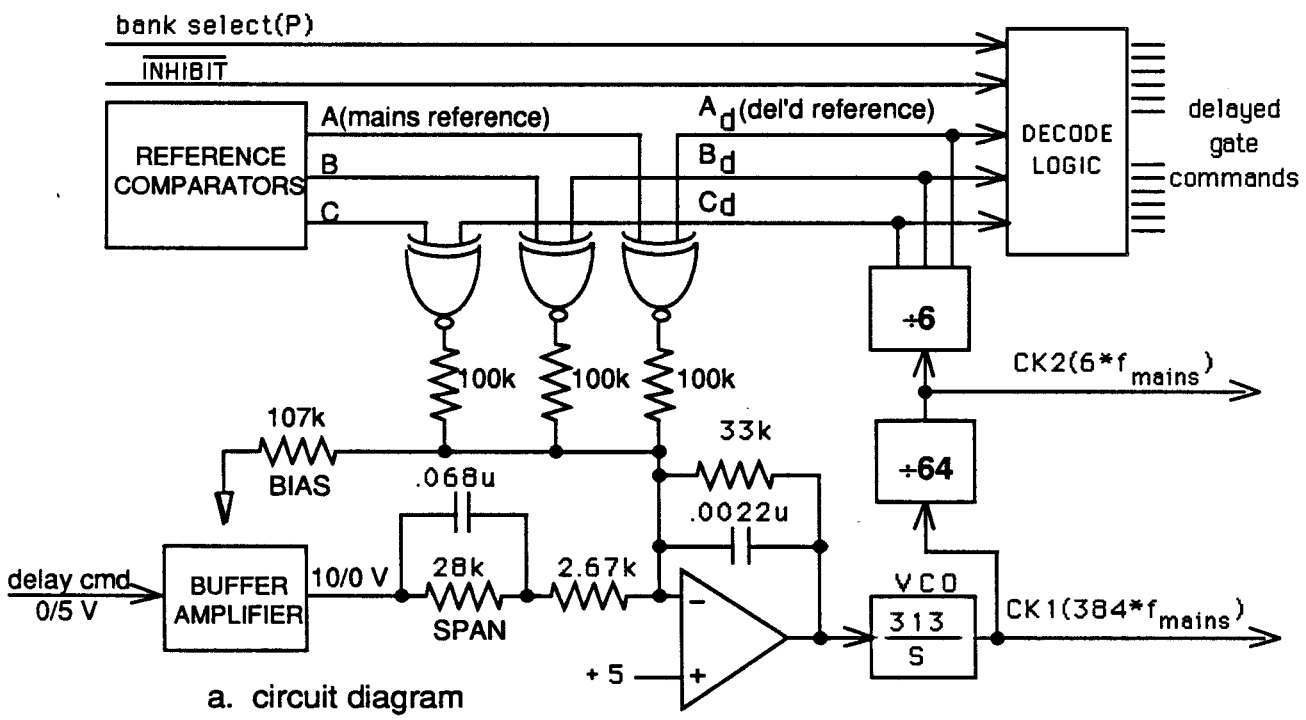

a. circuit diagram

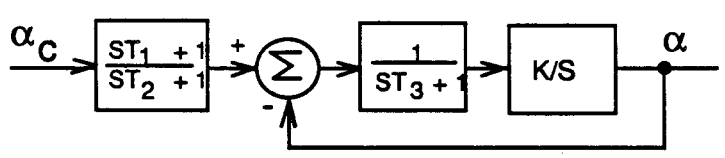

b. block diagram for frequency response calculation

Figure 5. PLL Gate Delay Angle Generator

K, time constants T1 and T2 of the input high pass filter and time constant T3 of the summing amplifier feedback lowpass filter[3]. Typically:

K = 313 sec-1	T1 = 166 usec
T2 = 1900 usec	T3 = 73 usec

The frequency response of the gate delay generator is characterized by -3 dB attenuation at 129 Hz and -45^0 phase shift at 548 Hz . A computer program is available for computing the frequency response with arbitrary gain and time constants.

Figure 6 shows the transient response of the firing circuit in combination with series-connected thyristor and diode bridge converters operating into a resistive load. The delay command voltage is a 30 Hz square wave. The gate delay angle range is 135^0 to 45^0. The inverting to rectifying transition is completed in 6.0 msec and from rectifying to inverting in 3.0 msec.

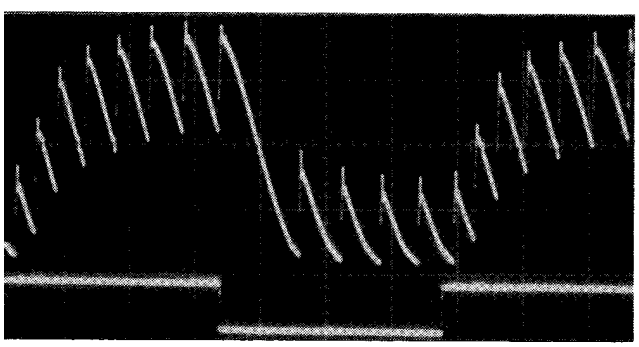

op trace:converter output, 100V/div
ottom trace: 30Hz delay command, 2V/div
ime base: 5 msec/div

Figure 6. Converter Transient Response

2.1.4 Gate Pulse Profile Selection

Figure 7a shows the timing diagram of the mains voltage references, delayed references, the 384*f_{mains} clock(CK1), and the 6*f_{mains} clock (CK2).

AC controller gating requires a burst of gate pulses that is sustained for at least 120^0. This pulse profile is produced by AND'ing the two delayed +A gate pulse:

$$+A = A_d \cdot B_d \cdot CK1.$$

Two 30^0 wide and 30^0 spaced bursts of 19,200 Hz carrier serve for converter gating. This profile ensures that a gate pulse is present 60^0 after the initial gate pulse. This is required for stable operation with discontinuous current. Thus for the +A gate logic:

$$+A = A_d \cdot B_d \cdot CK1 \cdot CK2.$$

Twelve-pulse conversion is used to eliminate the 5th and 7th harmonics of the mains current normally present with 6-pulse conversion[4].

In the firing circuit under discussion, one main firing board and one simple slave firing board provide the necessary 30^0 displaced sets of gate pulses. The LSI device is configured to output the 30^0 displaced sets of gate pulses by simply connecting the 360 Hz clock to the polarity input(that is, by making P = CK2). Thus, as shown in Figure 9d, the α^0 delayed double gate pulse burst for the +A1 thyristor of the #1 bridge gated from the main firing board is formed by:

$$+A1 = A_d \cdot B_d \cdot CK1 \cdot P.$$

Likewise, the α^0 + 30^0 delayed burst for the +A2thyristor of the #2 bridge gated from the slave firing board is derived from:

$$+A2 = A_d \cdot B_d \cdot CK1 \cdot P$$

2.1.5 Pulse Amplifiers and Pulse Transformers

The gate drive circuit consists of a 7-darlington transistor IC, three 150 ohm/.33 uF primary voltage dropping networks, and six pulse modules. Each pulse module contains a 2:1 stepdown pulse transformer, two diodes, primary and secondary shunt resistors and an output fuse. The +A and -A circuit, one third of the total, is shown in Figure 8a. Figure 8b shows the output current pulse into a 1.0 ohm load.

Prior to the beginning of the gate pulse burst, the .33uF capacitor is discharged. Turn-on of the +A transistor effectively places the +30 V unregulated supply voltage across the pulse transformer

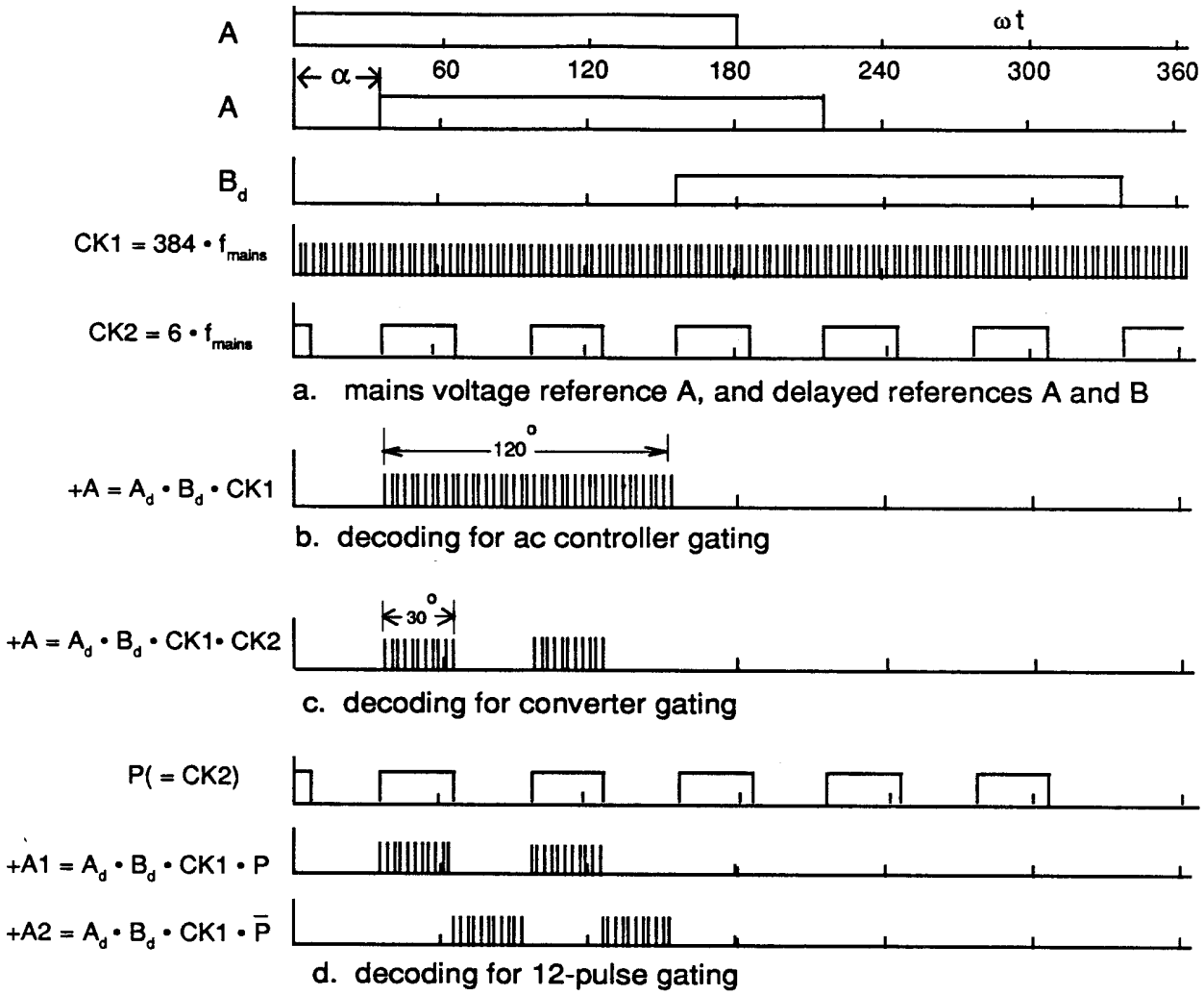

Figure 7. Gate Pulse Command Decoding

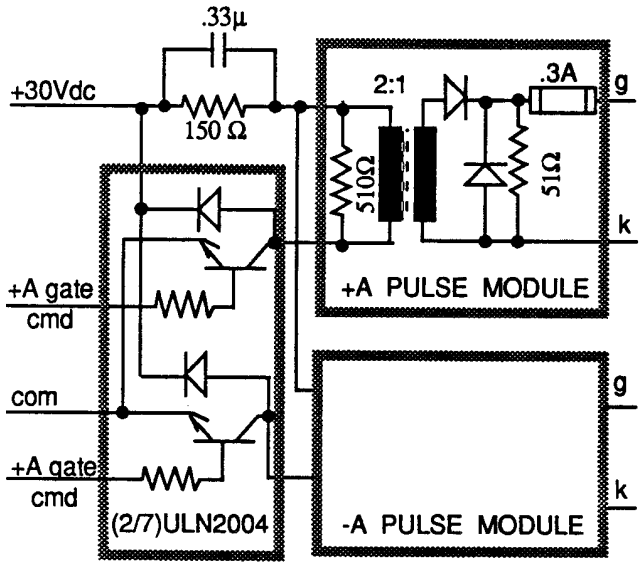

a. circuit diagram

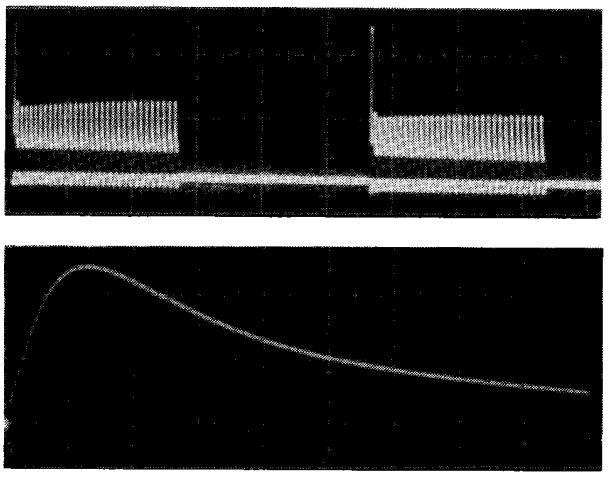

top trace: 1 A/div, 500 us/div
bottom trace: 1 A/div, 2 us/div

b. current into 1.0 ohm load

Figure 8. Gate Pulse Driver Circuit

in the burst characterized by 15 V open circuit voltage, 2.0 A short circuit current. The initial gate current pulse rises to 1.0 A in 1.0 usec. The average gate pulse width is 26 usec for 50 Hz mains. During the 26 usec off time, the .33 uF capacitor discharges to about 15 V. The second and succeeding pulses in the burst then have an open circuit voltage of 15 V and a short circuit current of 1.0 A. The lower amplitude sustaining gate pulses provide adequate gate drive for stable operation with discontinuous load current while economizing on the average gate power and dissipation in the 150 ohm primary voltage dropping resistor.

The secondary circuit consists of a series diode to prevent reverse gate current, a shunt diode to limit reverse gate-cathode voltage, a 51 ohm noise suppression resistor and a fuse. The fuse prevents damage to the board and cabling caused by miswired gate/cathode connections or by the unlikely failure of a diode in the module.

3. APPLICATIONS

Modern high power thyristors employ amplifying gate structures. This permits the typical one ampere peak gate current pulse of the firing board to safely trigger thyristors with ratings exceeding one kiloampere. Applications of the general purpose firing board thus extend from several kW to several mW. The lower power end of the range has trended upward as bipolar and MOS transistor devices become practical replacements for thyristors at higher power levels. Usage of the firing board is about evenly split between converters and ac controllers.

3.1 CONVERTERS

3.1.1 Two -Quadrant Bridge

The basic bridge converter connection diagram is shown in Figure 9. The converter is 1-quadrant(positive current, positive voltage) if the load is passive or 2-quadrant(positive current, positive or negative voltage) if the load is active and reversible. In 6-thyristor converters, the firing of variable voltage input transistor inverter ac motor drives. Other major applications are large dc motor drives and dc power supplies for: high energy particle accelerator focussing magnets, vacuum arc furnaces, electro-plating and anodizing and vacuum sputtering.

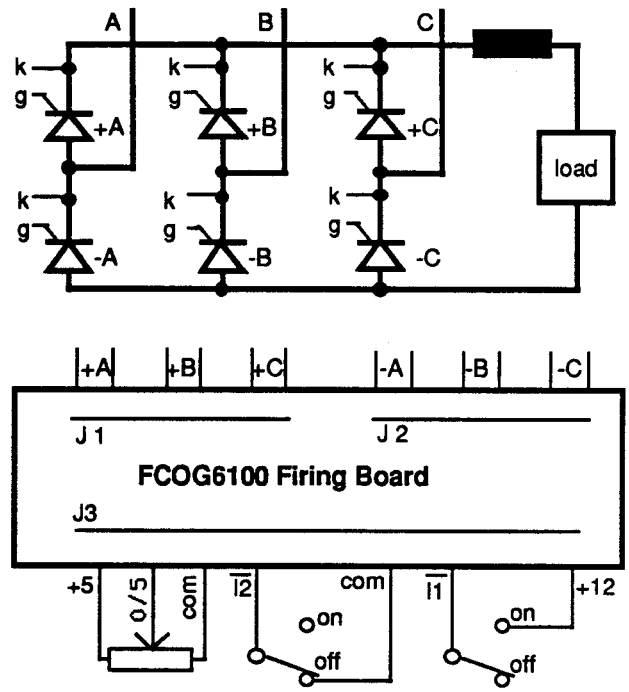

Figure 9. Full Bridge Converter

3.1.2 Star Rectifier

The star rectifier, Figure 10, is often used in low voltage/high current applications. An interphase transformer may be installed to broaden the transfomer secondary pulse from 60^0 to 120^0 to improve the transformer utilization. The transformer primary is usually delta-connected to provide a low impedance path for third harmonic current.

3.1.3 Four-Quadrant Converter

The circuit of Figure 11 consists of two independent bridges, #1 and #2. These are gated by the main and auxiliary firing boards, respectively.

The four quadrant converter operates in the circulating-current-free mode. That is, gating is inhibited for an interval at each polarity transition to prevent simultaneous conduction of the #1 and

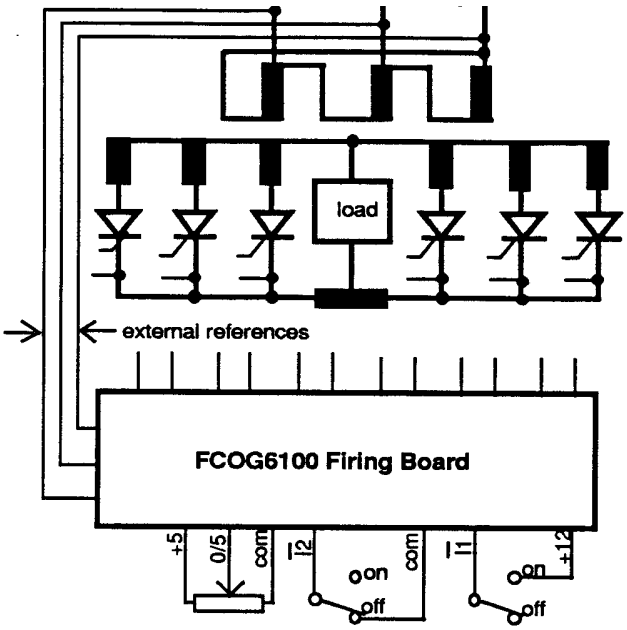

Figure 10. Star Rectifier with Interphase Transformer

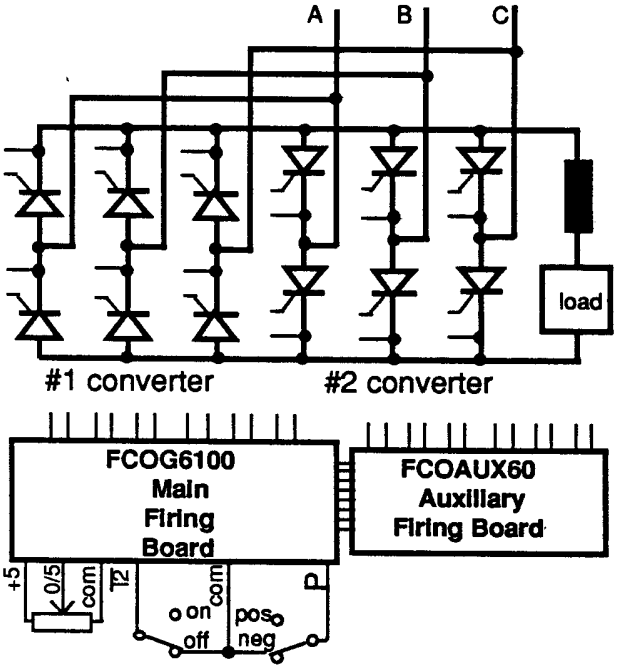

Figure 11. Four-Quadrant Converter

#2 bridges. An optional fixed time inhibit circuit can be installed on the main firing board, or a variable time inhibit can be implemented based on current or voltage sensing.

Applications of the four-quadrant converter include rapid reversing dc motor drives, scrap magnet reversing power supplies and three phase to single phase frequency converters. Enerpro recently developed a low frequency single phase power supply for oil well stimulation using the circuit of Figure 11.

3.2 AC CONTROLLERS

3.2.1 In-line Controller

Figure 12 gives the connection diagram for the basic in-line ac controller. With the addition of various regulator boards, this circuit controls:

- resistance heating power.
- transformer primary voltage in high voltage or high current power supplies.
- starting current in reduced voltage solid-state motor starters.
- inrush current of wind powered asynchronous generators.

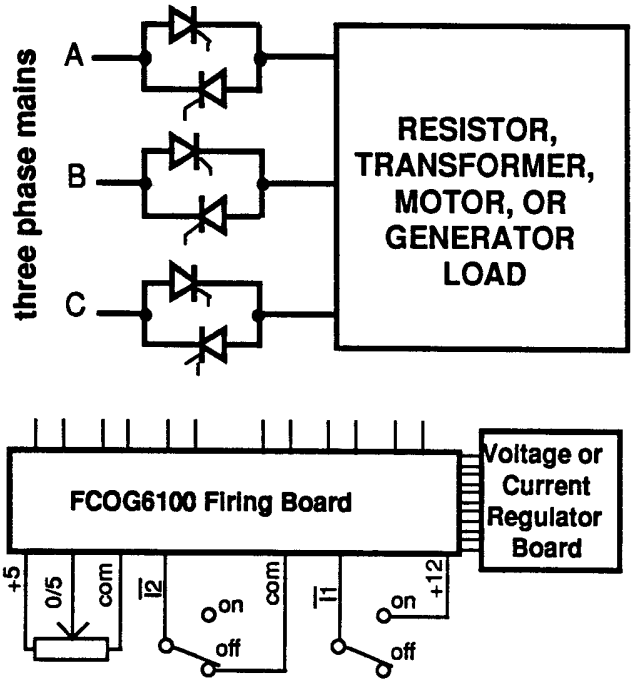

Figure 12. In-line AC Conttroller

3.2.2 Energy Saving Soft Start Starter

The reduced voltage motor starter control electronics can function with the built-in soft-start circuit on the firing board, or a regulator board can be added to program the motor starting current, voltage or speed.

The firing board and regulator board can also operate the motor at reduced voltage at light load, thereby improving efficiency by reducing the magnetizing current and associated losses[5].

3.2.3 Induction Generator Controller

The firing board has found a substantial use in wind power generation, where 1400+ controllers are installed with a rated capacity of about 150 mW (approximately 8% of the world's grid connected wind machines)[6].

The wind powered induction generator presents an unusual control problem for two reasons; 1. the generator must be connected and disconnected from the mains very frequently during light wind conditions, and, 2. the generator operates a small fraction of its rating, and hence with higher than necessary magnetizing current and associated losses much of the time.

It can be shown[7] that the fraction of the mains voltage applied to the generator via the ac controller is a function of the difference between the thyristor gate delay angle and the generator impedance angle. In operation, the thyristors are gated at an angle well in excess of 90°[8, 9]. When the generator is rotating at less than synchronous speed, the impedance angle is less than 90° and the difference between the gate delay angle and the impedance angle is large. The generator excitation is thus low, typically about 20% of the mains voltage.

As the generator is driven by the input shaft to synchronous speed and above, the impedance angle increases to more than 90° and the difference between the gate delay angle and the power factor angle converges to zero, causing the generator voltage to reach 100%(less the thyristor on-state voltage drop).

A small amount of generator negative voltage feedback stabilizes the grid connection process[9].

3.2.4 Reversing and Two Speed Motor Controllers

The main firing board and the auxiliary firing board can be arranged to gate a 10-thyristor ac switch. In Figure 13, the switch output is configured to form a sequence reversing motor controller. A minor variation of this circuit provides a two-speed motor or generator control.

In these applications, an open circuit at the polarity signal input makes P = 1 and thus selects the main firing board to gate the thyristors designated as +AP, +BP, +C, -AP, -BP and -C. Similarly, connecting the P input to the circuit common selects the auxiliary firing board to gate thyristors $+A\bar{P}$, $+B\bar{P}$, +C, $-A\bar{P}$, $-B\bar{P}$ and -C.

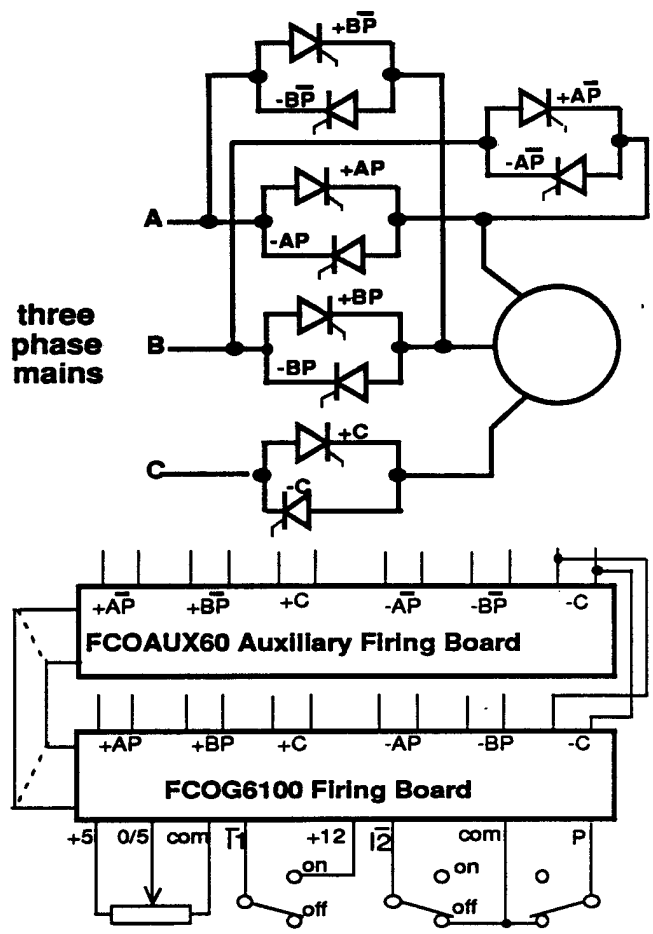

Figure 13. Ten-Thyristor AC Controller

An interesting example of a sequence reversing controller is shown in the photo, Figure 14. This assembly consists of 30 thyristors gated by three main firing boards and three auxiliary firing-boards. These elements separately control the forward and reverse thrust for three sections of a large linear induction motor. These linear motors are used in automobile and truck assembly plants to position vehicle chassis for automated wheel alignment and other operations.

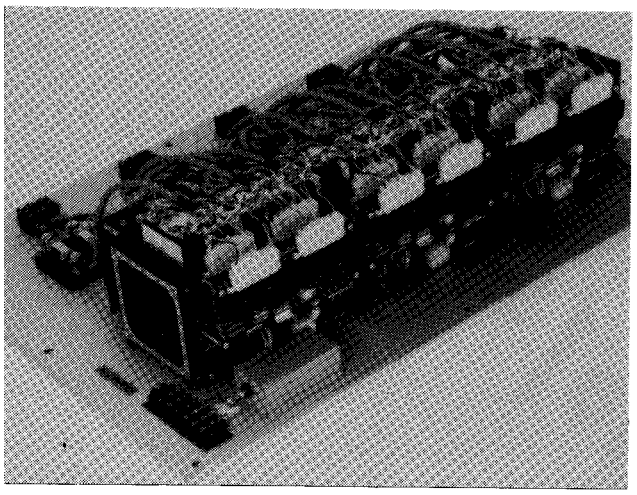

Figure 14. Triple Reversing Linear Motor Controller

4. CONCLUSIONS

This paper has described the operating concept and some major applications of a general purpose three phase thyristor gate firing board.

The firing board utilizes a technique for equidistant gating that was originally developed for high voltage dc power transmission. The method was adapted and refined for purpose use and implemented with a CMOS gate array LSI device. The result is a compact, reliable and easy to apply product that been adopted by manufacturers of power conversion and motor control equipment in a wide variety of industries.

5. REFERENCES

1. J. Ainsworth, "The phase-locked oscillator - A new control system for controlled static converters", IEEE Trans. Power App. Syst., Vol. PAS-87, pp. 859-865, Mar. 1969

2. F. Bourbeau, "LSI based three-phase thyristor firing circuit", IEEE Trans. Ind. Appl., Vol. IA-19, pps. 571-578, Aug. 1983.

3. G. Nash, "Phase-lock loop design fundamentals", Application Note AN-535, Motorola, Inc.

4. G. Moltgen, "Line commutated thyristor converters", Siemens Aktiengesellschaft, Pitman Publishing, London, 1972

5. F. Bourbeau, "Load responsive control system for constant speed induction motor", U.S. Patent No. 4,355,274, Oct. 19, 1982.

6. F. Bourbeau, "Grid connection with Auto Synchronous Controller", Proceedings of the American Wind Energy Assn. Annual Meeting, San Francisco, Calif., Oct. 5-8, 1987.

7. F. Khater, D. Novotny, "An equivalent-circuit model for phase-back voltage control of ac machines", IEEE Trans. Ind. Appl., Vol.IA-22, pps. 835-841, Sept./Oct. 1986.

8. F. Nola, "Electrical power generating system", U.S. Patent No. 4,388,585, June 14, 1983.

9. F. Bourbeau, "Stabilized control system and method for coupling an induction generator to ac power mains", U.S. Patent No. 4,656,413, Apr. 7, 1987.

The author acknowledges the copywrite of Intertec Publications of Ventura, Calif. to portions of this paper..